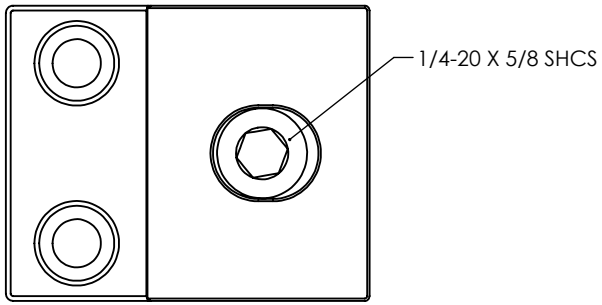

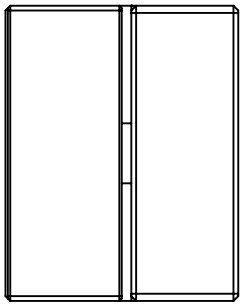

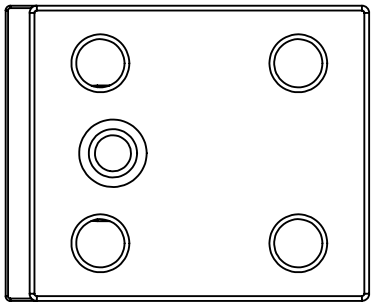

MOUNTING LAYOUT

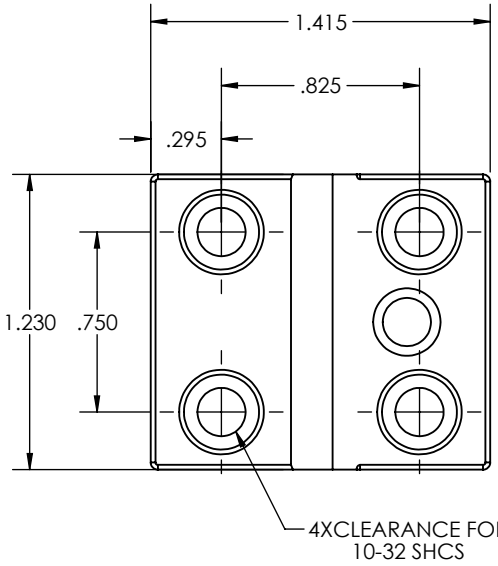

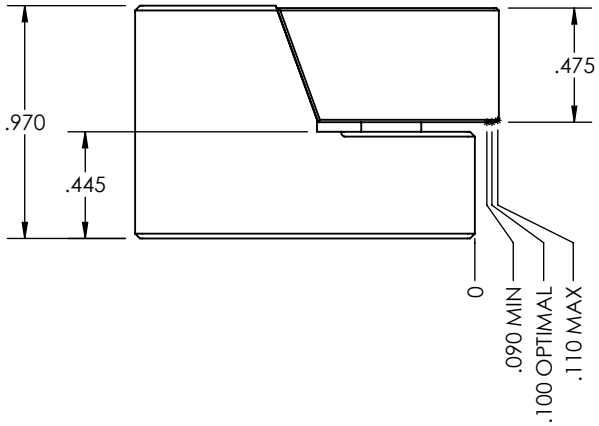

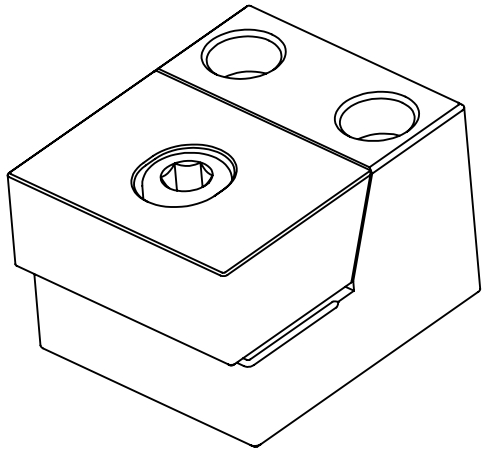

VISE FORCE 1
BY PAWS WORKHOLDING

SIDE LOAD
CLAMP

SIZE	DWG. NO.	REV.
A	2030-VF1-SW-CP	B
SCALE:1.25:1	WEIGHT:	SHEET 1 OF 1